AUDIO NOTE CO. UK. LTD.

RCA INPUT AND VOLUME

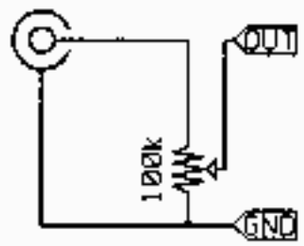

LINESTAGE

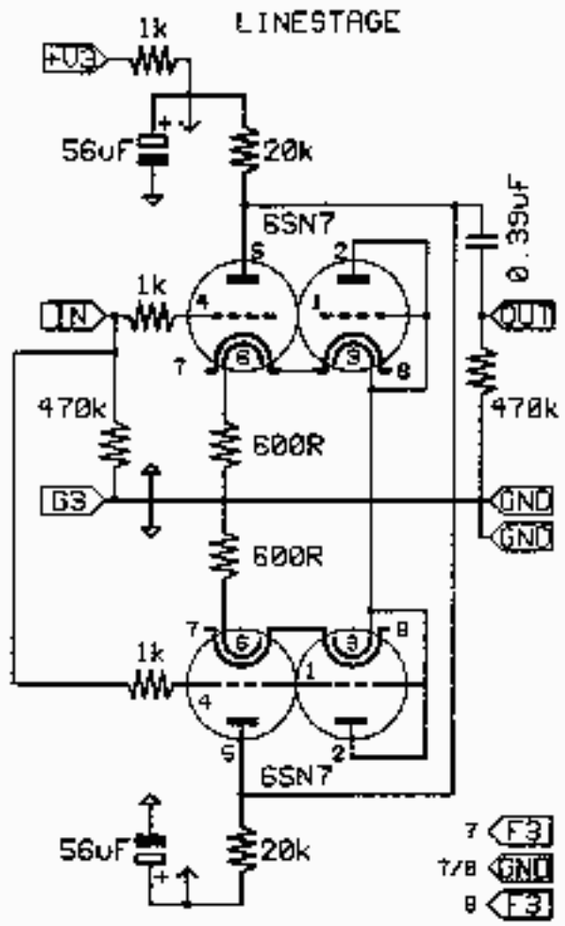

300B POWER-AMPLIFIER

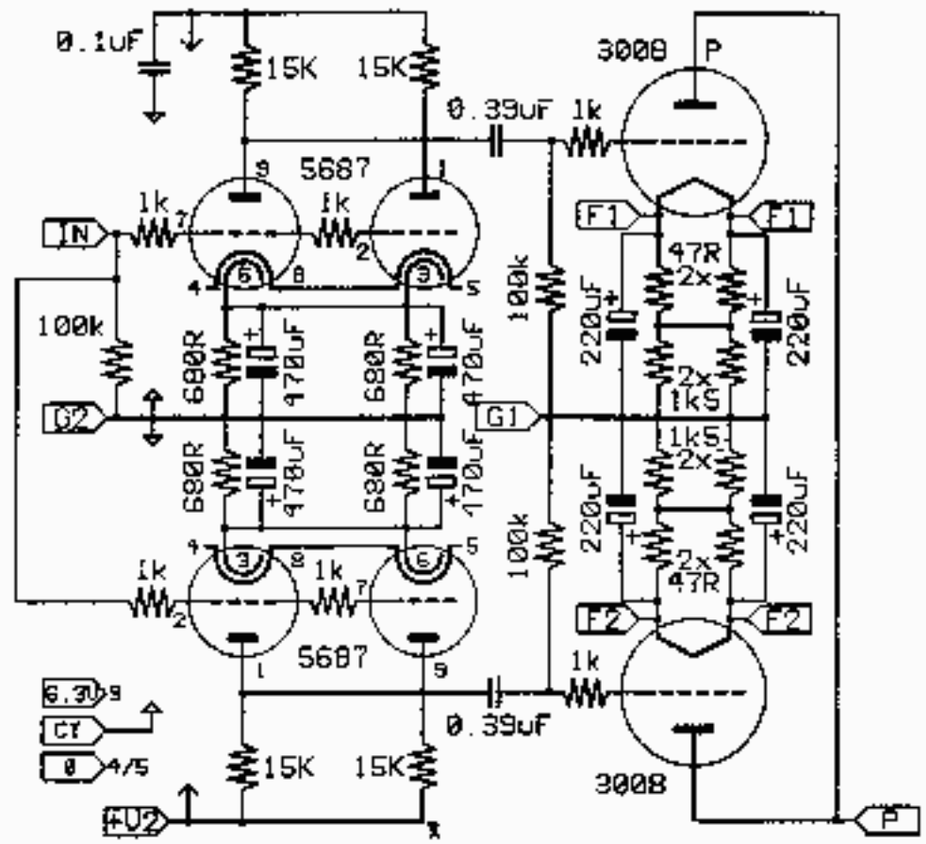

RECTIFICATION

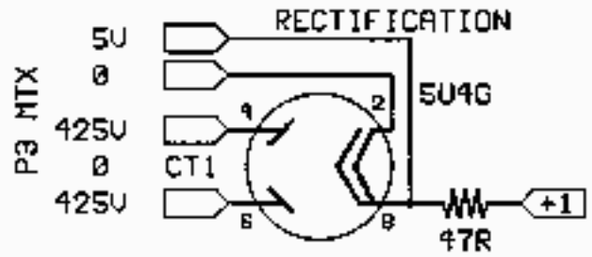

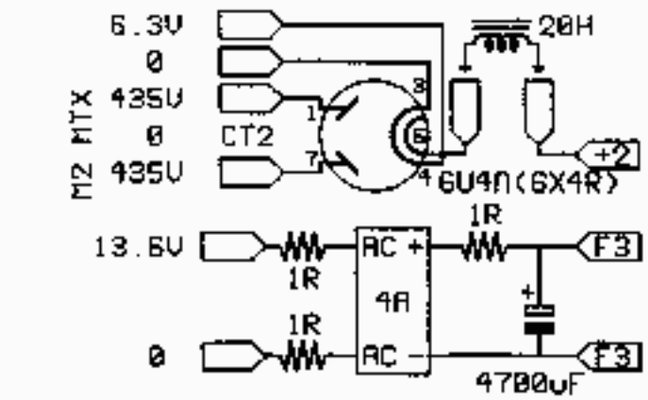

HT SMOOTHING

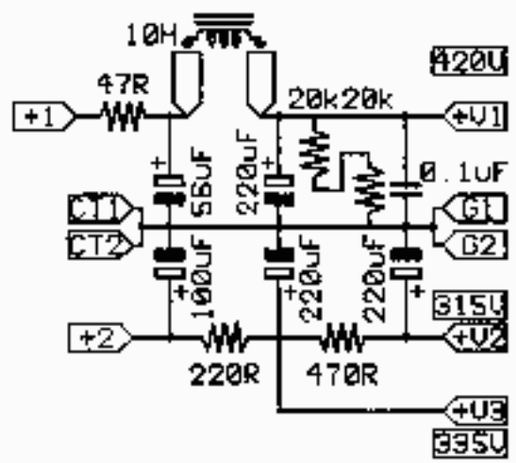

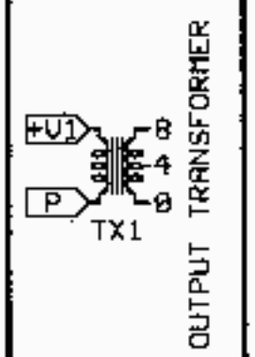

300B FILAMENT REG

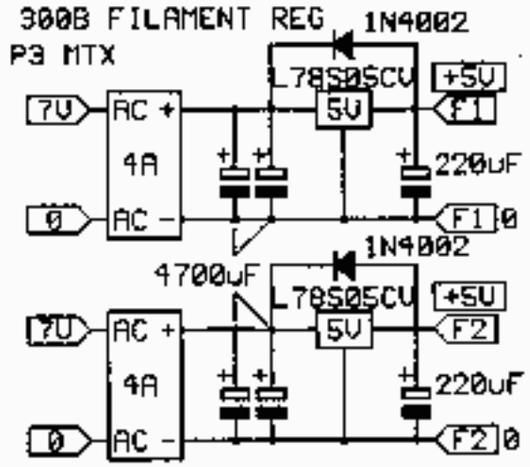

TITLE: P4 MONO NO: P4V2 ISSUE: 03	DRAWN: CLAUS MØLGAARD DATE: 31.01.1995 OK:	AUDIONOTE