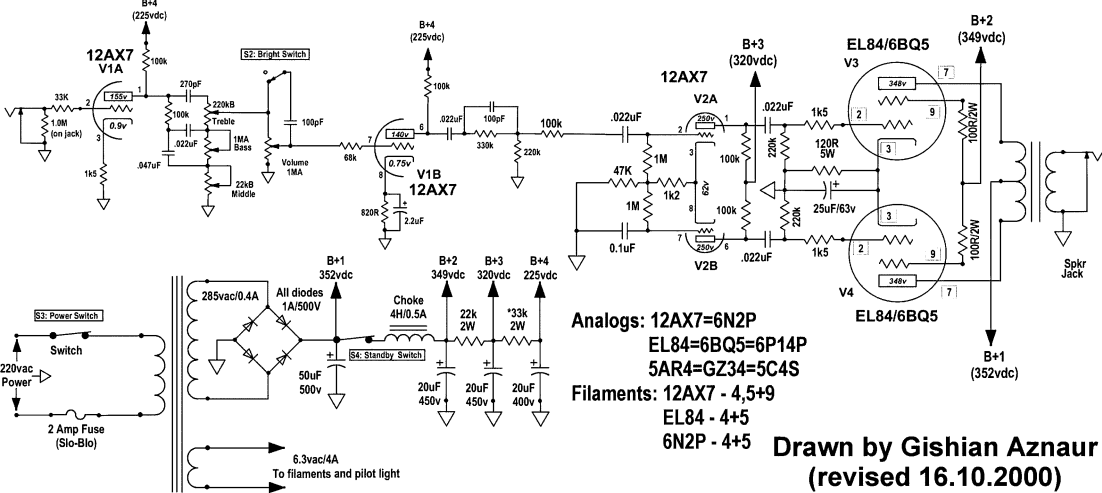
B+4
(225vdc)
12AX7
V1A
100k
33K
155v
0.9v
1.0M
(on jack)
1k5
270pF
100k
220kB
Treble
.022uF
1MA
Bass
.947uF
22kB
Middle
S2: Bright Switch
100pF
Volume
1MA
68k
B+4
(225vdc)
100k
140v
0.75v
V1B
12AX7
820R
2.2uF
.022uF
100pF
330k
220k
100k
.022uF
47K
1M
1k2
1M
0.1uF
62v
B+3
(320vdc)
12AX7
V2A
250v
100k
100k
250v
V2B
.022uF
.022uF
220k
220k
1k5
1k5
120R
5W
25uF/63v
EL84/6BQ5
V3
348v
100R/2W
100R/2W
V4
348v
EL84/6BQ5
B+2
(349vdc)
B+1
(352vdc)
Spkr
Jack
S3: Power Switch
Switch
220vac
Power
2 Amp Fuse
(Slo-Blo)
285vac/0.4A
All diodes
1A/500V
B+1
352vdc
50uF
500v
Choke
4H/0.5A
S4: Standby Switch
B+2
349vdc
B+3
320vdc
B+4
225vdc
22k
2W
*33k
2W
20uF
450v
20uF
450v
20uF
400v
6.3vac/4A
To filaments and pilot light
Analogs: 12AX7=6N2P
EL84=6BQ5=6P14P
5AR4=GZ34=5C4S
Filaments: 12AX7 - 4,5+9
EL84 - 4+5
6N2P - 4+5
Drawn by Gishian Aznaur
(revised 16.10.2000)