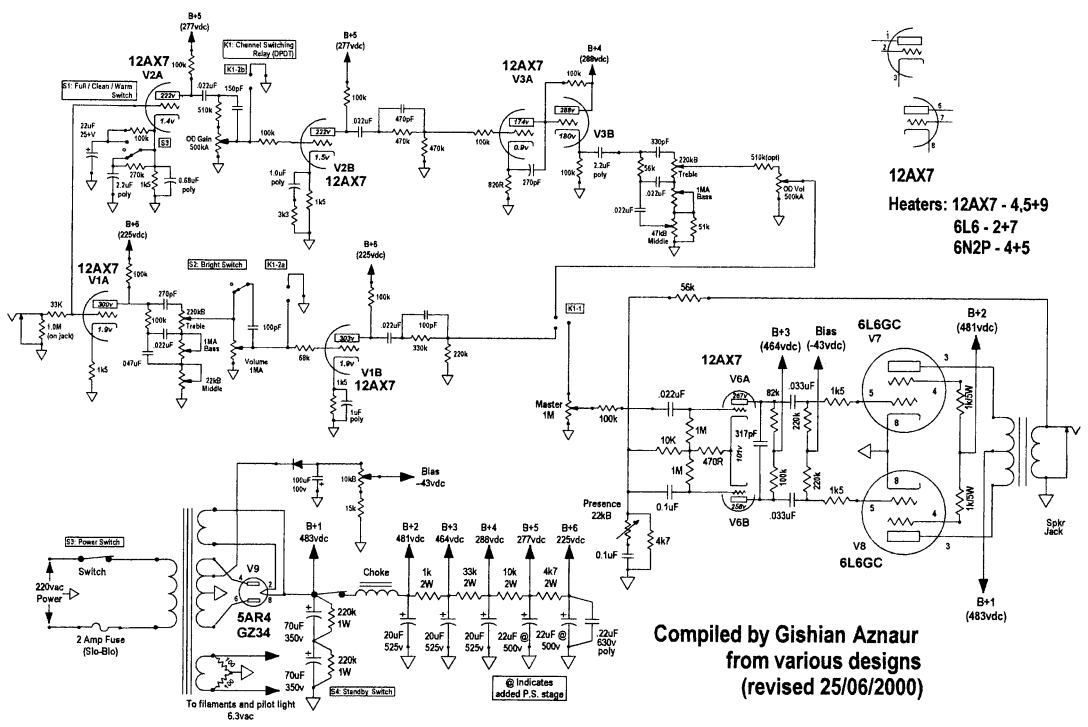
12AX7
Heaters: 12AX7 - 4,5+9
6L6 - 2+7
6N2P - 4+5
Compiled by Gishian Aznaur
from various designs
(revised 25/06/2000)
@ Indicates
added P.S. stage
S1: Full / Clean / Warm Switch
K1: Channel Switching Relay (DPDT)
S3: Bright Switch
S3: Power Switch
S4: Standby Switch
220vac Power
2 Amp Fuse (Slo-Blo)
To filaments and pilot light 6.3vac
5AR4 GZ34
Choke
Bias -43vdc
Presence 22kB
Master 1M
6L6GC
Spkr Jack