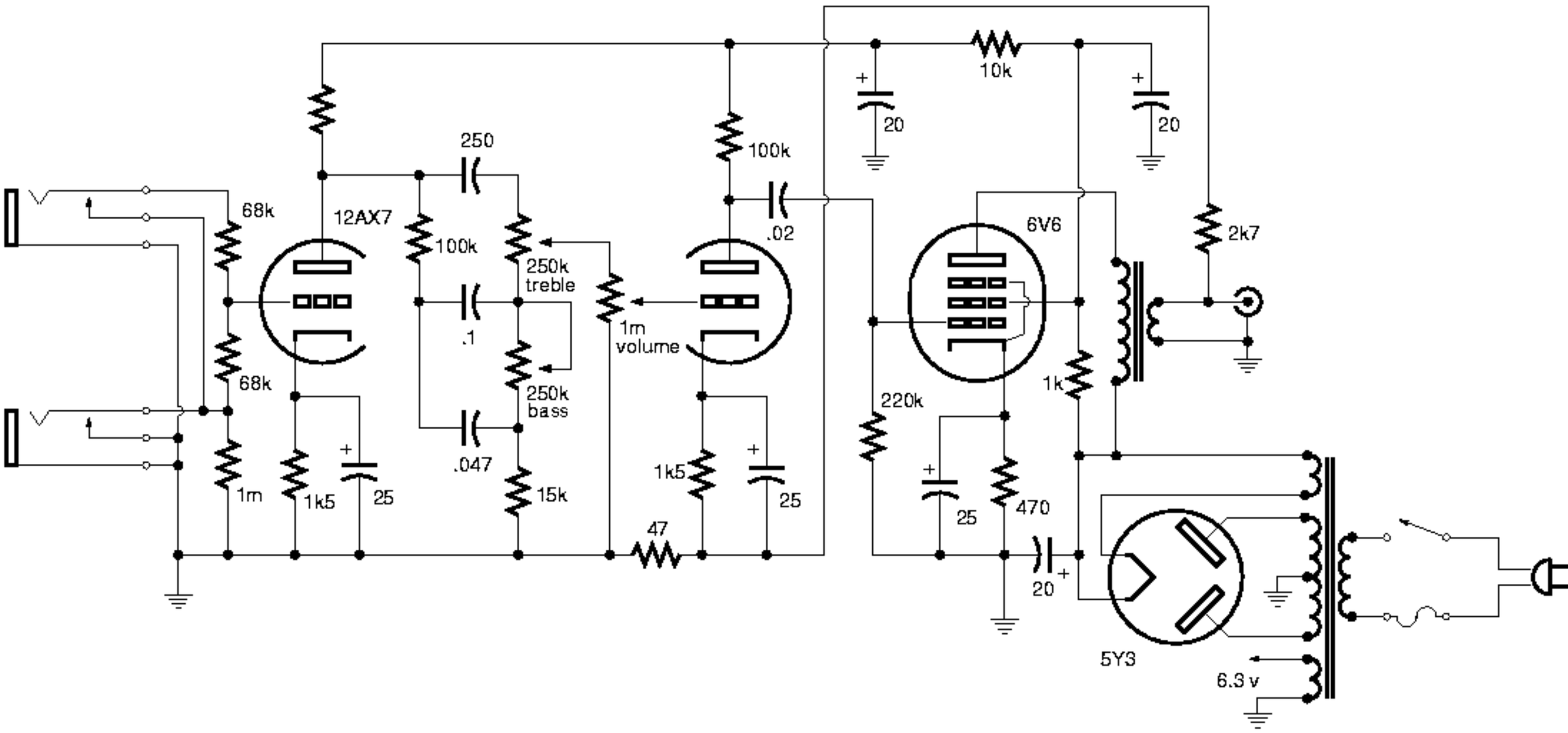
10k
20
20
250
100k
68k
12AX7
100k
250k
treble
.02
6V6
2k7
1m
volume
.1
68k
250k
bass
1k
220k
.047
1m
1k5
25
15k
1k5
25
47
25
470
20
5Y3
6.3 v